

HDQ3HB TRANSFER SWITCH EQUIPMENT

www.himel.com

HDQ3HB Transfer Switch Equipment

GB14048.11 / IEC60947-6-1

Range Presentation

HDQ3HB is Himel 3 series range of CB type Transfer Switch Equipment, automatic transferring the power supply between the normal power & standby power.

Standby power supply can be net power or generator. It can be integrated with HDM3 series MCCB to provide over current protection with integrated or split type controller available.

Features

- 5 Frame Sizes: 63, 100, 250, 400, 630AF
- Rated current In (A): 16 - 630A
- Rated voltage AC Ue (V): 400/415, Poles: 3 & 4
- Integrated or split intelligent controllor
- HDM3 integrated with overload , short circuit protection

Online Content

HDQ3HB

This offer fits GB14048.11 with AC-33iB / IEC60947-6-1AC-32B standard. For country product certificate, application requirements & more information, contact local Himel Sales.

Ordering Code

Product	Frame Size	Breaker Capacity	Rated current	Pole	Controller
HDQ3HB	**63**	**S**	**10**	**3**	**Z**
HDQ3HB	**63:** 63AF **100:** 100AF	**S:** 25kA	**10:** 10A **100:** 100A	**3:** 3P **4:** 4P	**Default:** Split **Z:** integrated
	250: 250AF **400:** 400AF **630:** 630AF	**F:** 50kA	**250:** 250A **630:** 630A		

Order Information

Current shell frame	Conventional thermal current	Breaking capacity	CDQ3HB	
			3 poles	4 Ordering code
			Ordering code	Ordering code
63AF	10	S	HDQ3HB63S103Z	HDQ3HB63S104Z
	...		...	...
	63		HDQ3HB63S633Z	HDQ3HB63S634Z
100AF	16	S	HDQ3HB100S163Z	HDQ3HB100S164Z
	...		...	...
	100		HDQ3HB100S1003Z	HDQ3HB100S1004Z
250AF	100	F	HDQ3HB250F1003Z	HDQ3HB250F1004Z
	...		...	...
	225		HDQ3HB250F2253Z	HDQ3HB250F2254Z
	250		HDQ3HB250F2503Z	HDQ3HB250F2504Z
400AF	200	F	HDQ3HB400F2003Z	HDQ3HB400F2004Z
	...		...	...
	400		HDQ3HB400F4003Z	HDQ3HB400F4004Z
630AF	400	F	HDQ3HB630F4003Z	HDQ3HB630F4004Z
	...		...	...
	630		HDQ3HB630F6303Z	HDQ3HB630F6304Z

HDQ3HB Transfer Switch Equipment

GB14048.11 / IEC60947-6-1

Technical Parameters					
Model & Spec	**HDQ3HB-63**	**HDQ3HB-100**	**HDQ3HB-250**	**HDQ3HB-400**	**CDQ3HB-630**
Executive circuit breaker	HDM3-63	HDM3-100	HDM3-250	HDM3-400	HDM3-630
Number of poles	3、4				
Available standard	GB14048.11 / IEC60947-6-1				
Electrical level	CB-level				
Use category	GB14048.11 AC-33iB / IEC60947-6-1 AC-32B				
Electrical performance	**HDQ3HB-63**	**HDQ3HB-100**	**HDQ3HB-250**	**HDQ3HB-400**	**HDQ3HB-630**
Rated insulation voltage Ui (V)	690	800			
Rated impulse withstand voltage Uimp (kV)	6	8			
Rated operating voltage Ue (V)	400				
Conventional thermal current Ie (A)	10/16/20/25/32/40/50/63	16/20/25/32/40/50/63/80/100	100/125/140/160/180/200/225/250	200/225/250/315/350/400	400/500/630
Rated working frequency (Hz)	50				
Breaking capacity level	S	S	F	F	F
Rated short circuit breaking capacity Icn (kA)	25	25	50	50	50
Rated short circuit making capacity Icm (kA)	52.5	52.5	105	105	105
Mechanical life (cycles)	10000	10000	5000	5000	5000
Electrical life (cycles)	1500		1000		
Conversion time	≤3s				
EMC level	Environment B				
Sampling mode	Normal and standby three-phase sampling				
Control function					
Power grid (P) – Power grid (P)	■				
Power grid (P) – Generator (G)	■				
Auto operation mode – Auto power-on and auto reset	■				
Auto operation mode – Auto power-on but not auto reset	■				
Auto operation mode – Mutual backup	■				
Electric operation vis button	■				
Manual operation vis handle	■				
Remote transfer	■				
Normal and standby power state output	■[2)]				
Normal and standby power-on state output	■				
Normal and standby trip state output	■				
Fire dual-divided	■(Alarm lamps flash simultaneously)				
Generator startup	■				

HDQ3HB Transfer Switch Equipment

GB14048.11 / IEC60947-6-1

Technical Parameters					
Controller	**HDQ3HB-63**		**HDQ3HB-250**	**HDQ3HB-400**	**CDQ3HB-630**
Overload protection	■				
Instantaneous protection	■				
Over-voltage protection	■(Factory set: 264V)				
Under-voltage protection	■(Factory set: 184V)				
No-voltage protection	■				
Lost phase protection	■				
Motor load phase sequence identification protection	■[1)]				
Special lost phase protection for motor load	■[1)]				
Switch fusion welding protection	■(ERROR02)				
Switch movement protection	■(ERROR02)				
Power failure alarm	■(Power indicator at the failure side flashes)				
Trip failure alarm	■(Trip indicator at the failure side flashes)				
Trip failure button electrically reclosed	■				
Setting functions					
Over-voltage valve value adjustable	■ 253V~276V				
Under-voltage valve value adjustable	■ 253V~276V				
Conversion delay T1 time adjustable	■ 0~99.9s (Factory setting: 3s)				
Return delay T2 time adjustable	■ 0~99.9s (Factory setting: 3s)				
Generator starting delay T3 time adjustable4)	■ 0~99.9s (Factory setting: 15s)				
Generator stop delay T4 time adjustable	■ 0~99.9s (Factory setting: 15s)				
Dimensions (mm)	**HDQ3HB-63**	**HDQ3HB-100**	**HDQ3HB-250**	**HDQ3HB-400**	**HDQ3HB-630**
Breaking capacity level	S	S	F	F	F
Integral 3P dimensions (W x H x D)	375x220x121	415x220x148	465x220x148	610x330x185	610x402x185 (Expansion row)
Integral 4P dimensions (W x H x D)					
Split 3P dimensions (W x H x D)	335x220x121	375x220x148	425x220x148	575x330x185	575x402x185 (Expansion row)
Split 4P dimensions (W x H x D)					
Split controller dimensions (W x H x D)	85x166x92				
Split lead wire length	Standard length: 1.6m (customized wire length: 2m, 2.5m, 3m, 3.5m, 4m, 4.5m, 5m)				
Integral 3P installation hole sizes (W x H)	322x220	365x200	420x200	510x300	
Integral 4P installation hole sizes (W x H)					
Split 3P installation hole sizes (W x H)	282x200	325x200	380x200	478x300	
Split 4P installation hole sizes (W x H)					
Split controller installation hole sizes (W x H)	81x162				
Product phase spacing	25	30	35	48	
Phase spacing after expansion	-	-	-	-	68

- \- No this option
- ■ Standard
- □ Optional

[1)] OFF by default, with ON set by the controller menu
[2)] External power connected by customer
[3)] Only 3P product is provided
[4)] This delay function will be automatically off when the common terminal is completely turned off.

HDQ3HB Transfer Switch Equipment

GB14048.11 / IEC60947-6-1

Product Features

Convenient

Installed without sampling wires

With sampling wires built in for convenient installation



Reliable

With patented mechanism, the mechanical life increases to 15,000 cycles

Dual-rail patented interlock mechanism and auxiliary ON-OFF mechanism are configured to provide reliable operation.

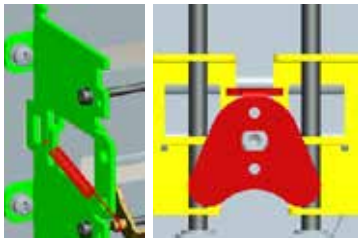

Safety

Compact size and multiple functions

With full steel frame structure and accurate locating features, an insulation cover and three-protection paining layers are provided outside the line board for guaranteeing multiple protections for safety.

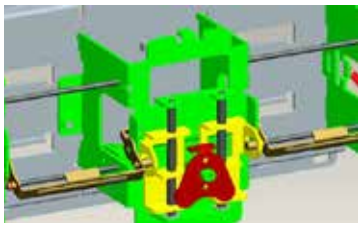

Robust

Powerful function and more selection

A type standard configuration provides auto-switch and self-reset for economical operation
B type standard configuration provides auto-switch and self-reset, auto-switch and not-self-reset and fire dual-division functions and powerful function



HDQ3HB Transfer Switch Equipment

GB14048.11 / IEC60947-6-1

Product Diagram

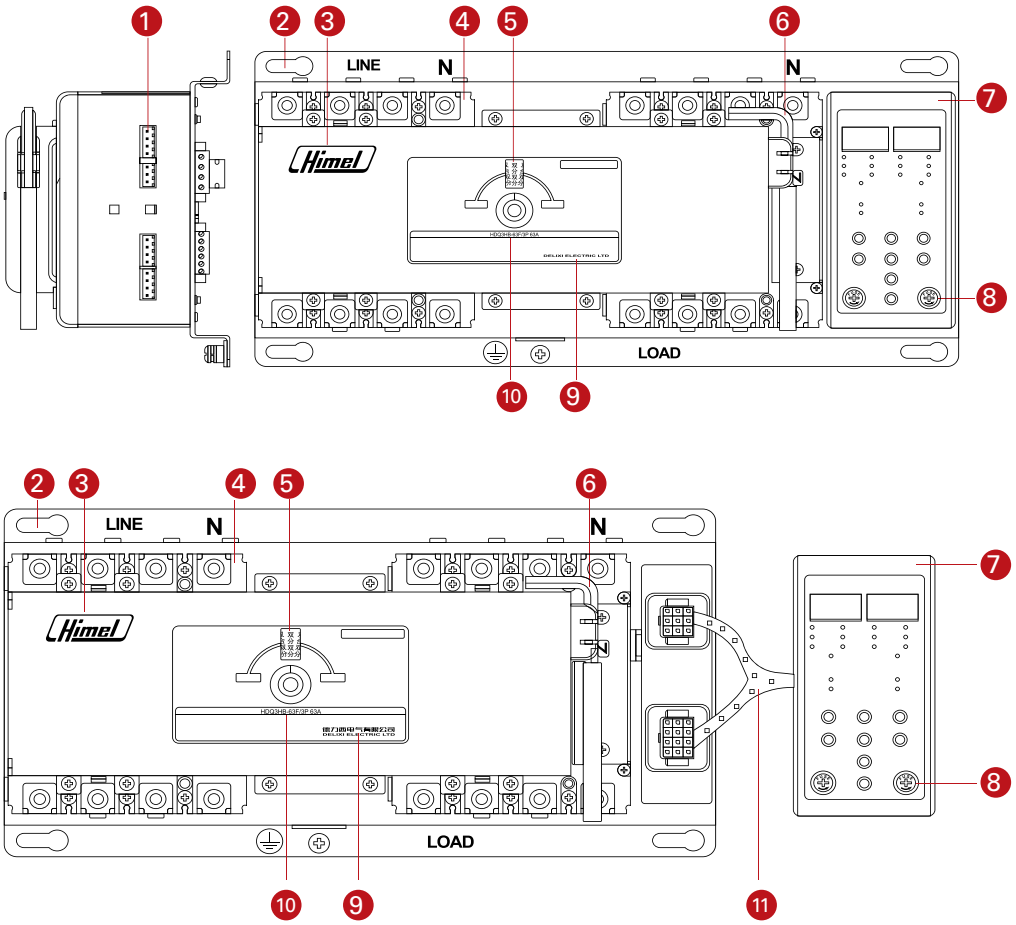

Product Nameplate

HDQ3HB ____ Automatic transfer switching equipment

Rated voltage:400V
Rated current: ____
rated frequency:50Hz
Class:CB class
Use category:AC-32B

Rated short-circuit making capacity: ____
Rated short-circuit breaking capacity: ____
Rated impulse withstand voltage:6kA ____
Number of poles: ____
Production date ____

Standard：IEC60947-6-1

1	Wiring terminal	6	Operating handle	11	Split controller connecting cable
2	Mounting hole	7	Controller	12	Nameplate parameters
3	Company logo	8	Fuse tube		
4	Power terminal	9	Company name		
5	Transfer position indication window	10	Product mode		

HDQ3HB Transfer Switch Equipment

GB14048.11 / IEC60947-6-1

Installation of HDQ3HB

Split controller

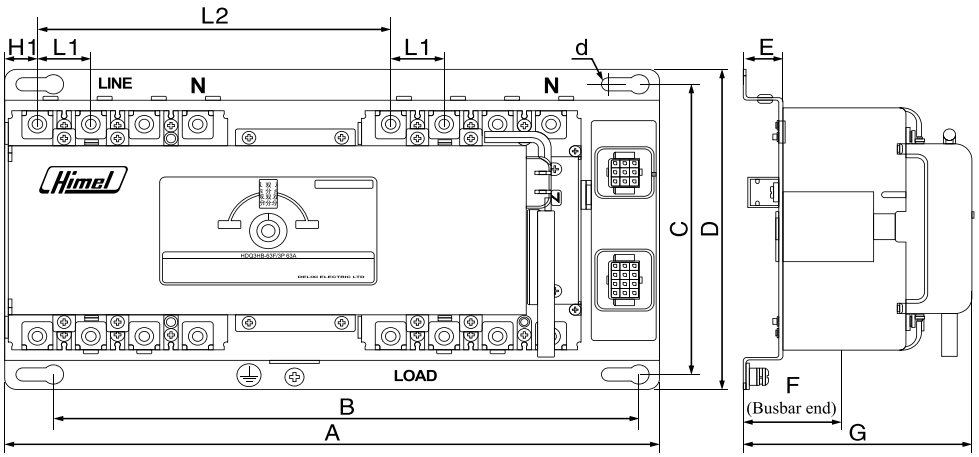

Figure1:Split HDQ3HB-630~400/ 3P and 4P

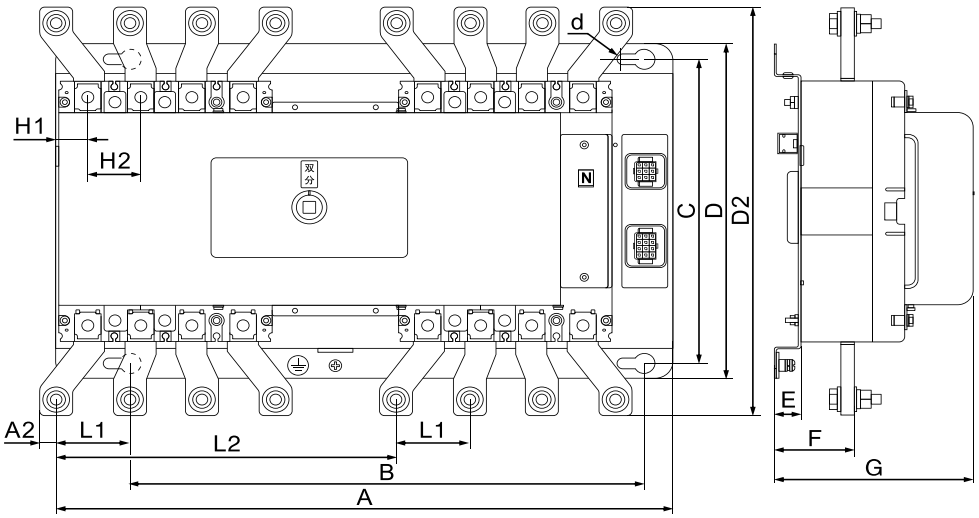

Figure2:Split HDQ3HB-630/ 3P and 4P

Size / Spec.	A	A2	B	C	D	D2	E	F	G	L1	L2	H1	H2	d
CDQ3HB-63S	335	-	282	200	220	-	25	49	121	25	180	15.5	-	9
CDQ3HB-100S	335	-	282	200	220	-	25	49	121	25	180	15.5	-	9
CDQ3HB-250F	425	-	380	200	220	-	25	48	148	35	230	21.5	-	9
CDQ3HB-400F	575	-	478	300	330	-	25	62	185	48	316	30.5	-	10
CDQ3HB-630F	575	14.5	478	300	330	402	25	77	185	68	316	30.5	48	10

HDQ3HB Transfer Switch Equipment

GB14048.11 / IEC60947-6-1

Installation of HDQ3HB

Integrated controller

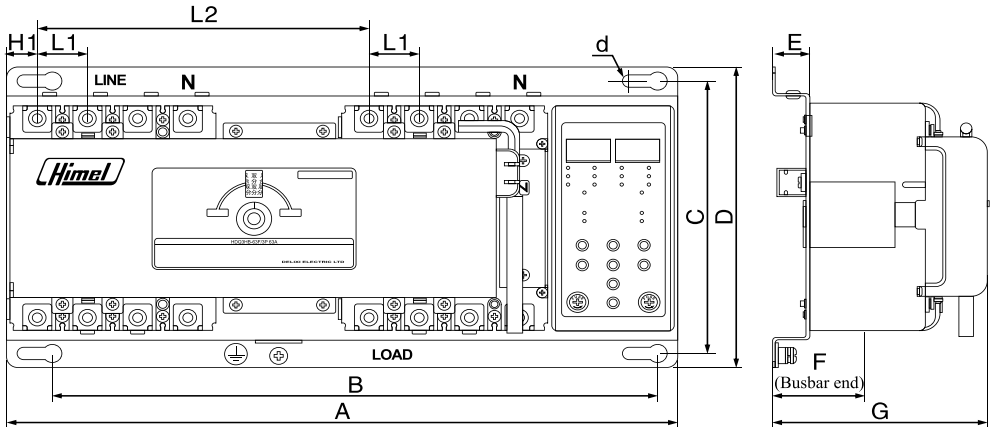

Figure3:Integrated HDQ3HB-630~400/ 3P and 4P

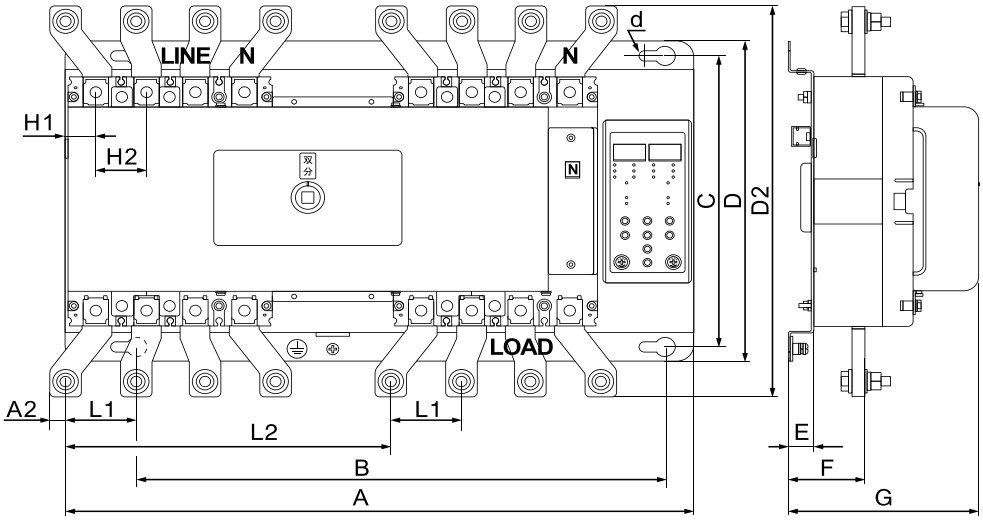

Figure4:Integrated HDQ3HB-630/ 3P and 4P

Mode / Spec.	A	A2	B	C	D	D2	E	F	G	L1	L2	H1	H2	d
CDQ3HB-63S	375	-	322	200	220	-	25	49	121	25	180	15.5	-	9
CDQ3HB-100S	375	-	322	200	220	-	25	49	121	25	180	15.5	-	9
CDQ3HB-250F	465	-	420	200	220	-	25	48	148	35	230	21.5	-	9
CDQ3HB-400F	610	-	510	300	330	-	25	62	185	48	316	30.5	-	10
CDQ3HB-630F	610	14.5	510	300	330	402	25	77	185	68	316	30.5	48	10

HDQ3HB Transfer Switch Equipment

GB14048.11 / IEC60947-6-1

Safety Clearance

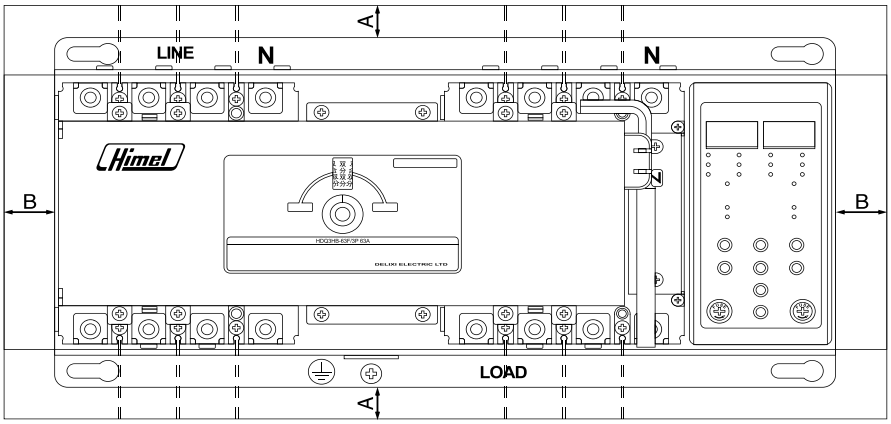

A:installation dimension to the upper and lower housings
B:installation dimension to the housing of the non-conductive part

	CDQ3HB-63S	CDQ3HB-100S	CDQ3HB-250F	CDQ3HB-400F	CDQ3HB-630F
A	25	25	45	85	85
B	40	40	40	80	80

Manual Operation Handle

When the Transfer Switch Equipmenting equipment is installed and commissioned,insert the handle into the handle housing in the arrow direction shown in the figure.

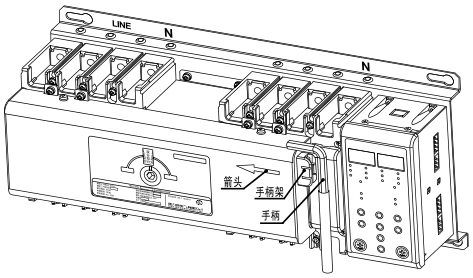

Controller Cut Out Dimension for Front Door

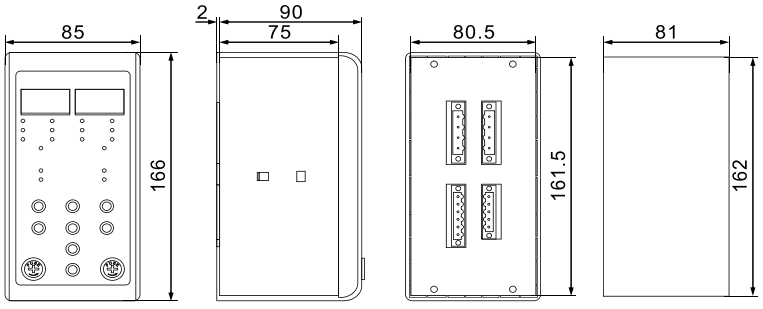

Figure6:Controller dimensions and cutout

HDQ3HB Transfer Switch Equipment

GB14048.11 / IEC60947-6-1

Products Connection

Main circuit diagram

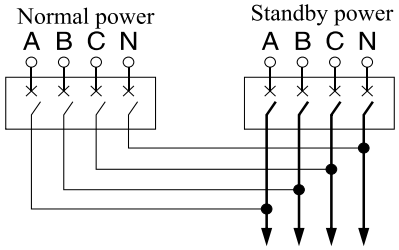

4P wiring diagram

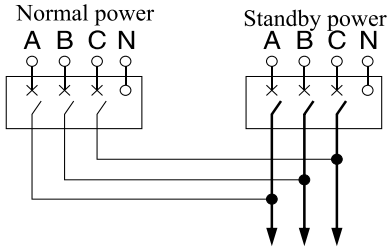

3P wiring diagram

ATS Status Indicator

103 standby power ON

102 standby MCCB trip

203 normal power ON

202 normal MCCB trip

If need to be lighted the LED , Access the power from normal & standby main circuit

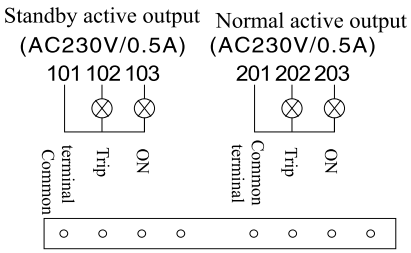

Gen Set control

302 Gen Set start

303 Gen Set stop

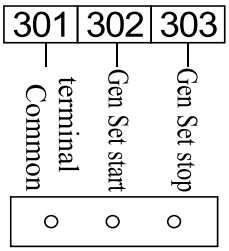

Remote Control

401 402 remote transfer to standby power

- Active with Auto model only
- 401 402 “On” ATS will transfer to standby power, whatever normal power is available or not.
- 401 402 “OFF” ATS will return to Auto control according to transfer setting.
- If standby power is abnormal , ATS will not to be transfered

501 502 dual switch off by fire control signal

- Active by 24VDC input from fire control signal whatever Auto/Manu model (+ - polarity free)
- 24VDC “ON” , switch off both normal/standby power immediately.
- 24VDC “ON turn to OFF”, ATS will return to normal power at Auto model.

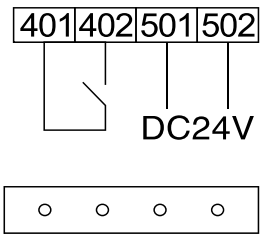

HDQ3HB Transfer Switch Equipment

GB14048.11 / IEC60947-6-1

Instruction for Controller Setting

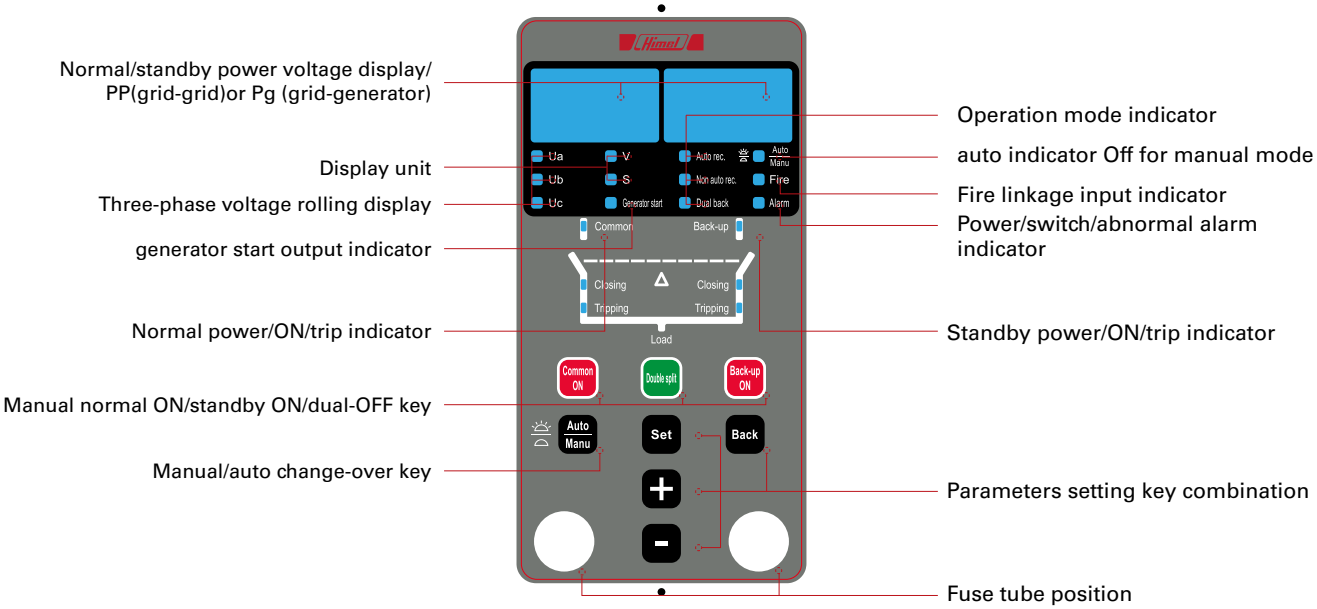

Indicator display description			
Indicator	**Function description**	**Indicator**	**Function description**
Ua	ON: The displayed value is a phase-A voltage value of the power supply. OFF: No.	Auto-reset	ON: Auto-switch and auto-reset mode OFF: NO
Ub	ON: The displayed value is a phase-B voltage value of the power supply. OFF: No.		ON: Auto-switch and not-auto-reset mode OFF: NO
Uc	ON: The displayed value is a phase-C voltage value of the power supply. OFF: No.		ON: Mutual standby mode OFF: No
V	ON: Voltage unit OFF: No.		ON: Auto mode OFF: Manual mode
s	ON: Time unit OFF: No.	Fire control	Flash: Fire signal input OFF: No
Generator starts	ON: Output the generator starting signal OFF: No.	Alarm	Flash: System works abnormally (power supply or switch) OFF: No abnormal phenomenon
Normal	ON: Normal power works normally Flash: Normal power works abnormally OFF: loss voltage of normal power (no power)	Standby	ON: Standby power works normally Flash: Standby power works abnormally OFF: loss voltage of standby power (no power)
ON (normal)	ON: Normal switch ON OFF: Normal switch OFF	ON (standby)	ON: Standby switch ON OFF: Standby switch OFF
Trip (normal)	Flash : Normal switch trips OFF:	Trip (standby)	Flash : Standby switch trips OFF:

HDQ3HB Transfer Switch Equipment

GB14048.11 / IEC60947-6-1

Flowchart for Controller parameters setting

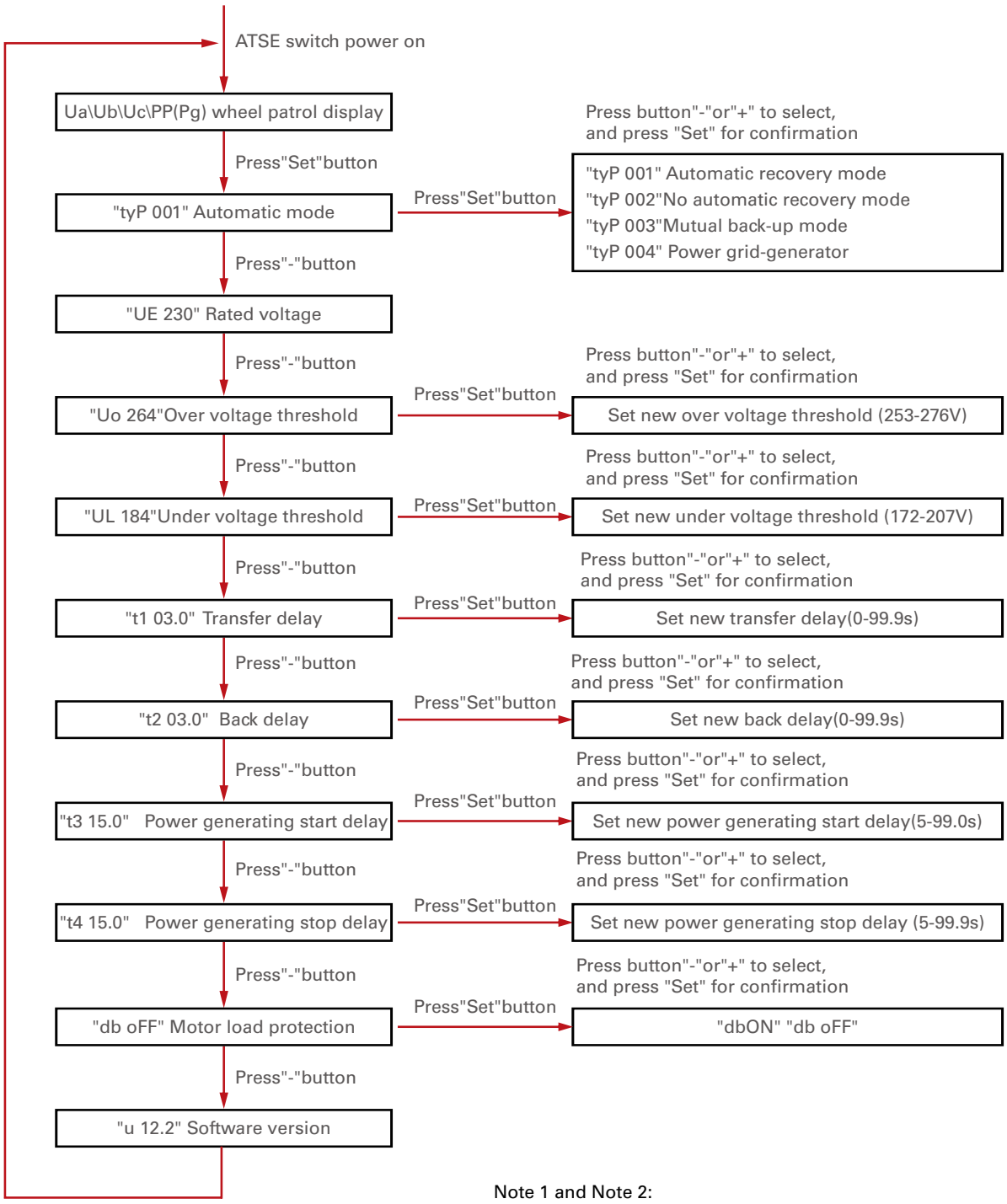

Note 1 and Note 2:
Inquiry and set are only available when controller is under power grid-generator mode.
Note 3:
Motor load protection function: incl. phase sequence identification and open-phase detection.

HDQ3HB Transfer Switch Equipment

GB14048.11 / IEC60947-6-1

Flowchart for Auto switching action

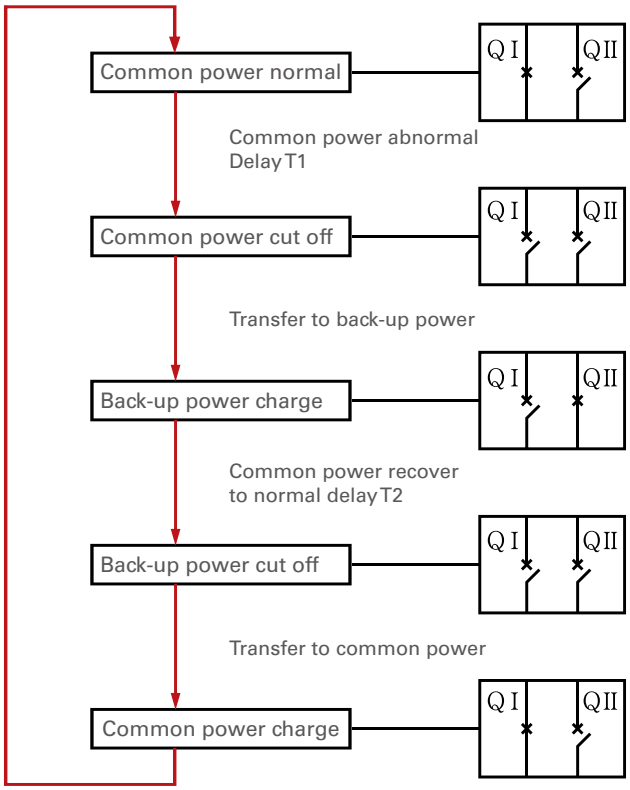

Power grid-Power grid
Automatic recovery(Automatic charge
and automatic recovery) working procedure

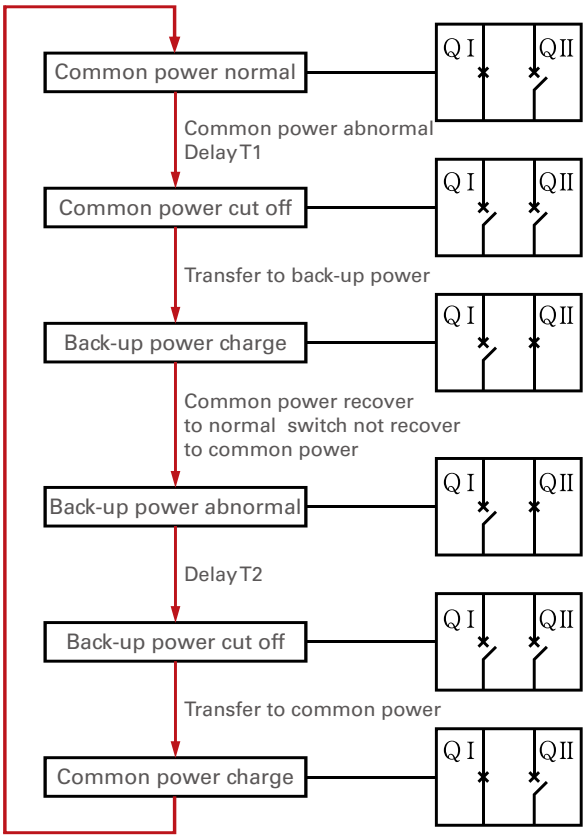

Power grid-Power grid
Mutual back-up(mutual back-up)
working procedure

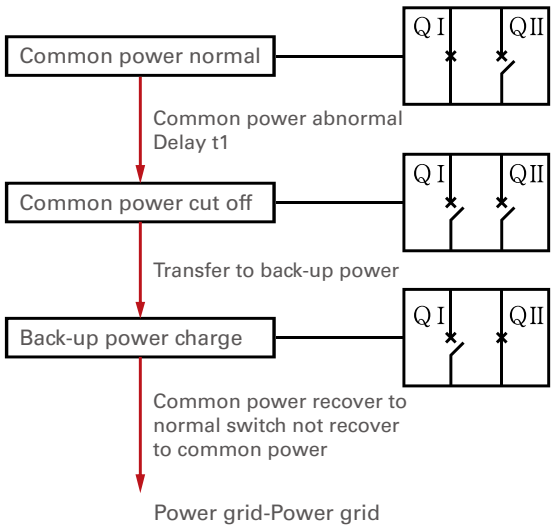

Power grid-Power grid
No automatic recover (automatic charge
and automatic recovery) working process

t1: Transfer delay, time from common power abnormal till QI cut off.
t2: Recovery delay, time from common power recovering to normal till QII cut off
t3: Generator start delay, time from common power abnormal till send generator starting signal.
t4: Generator stop delay, time from recover to common power till stop sending generator starting signal
QI: Breaker for common
QII: Breaker for back-up

HDQ3HB Transfer Switch Equipment

GB14048.11 / IEC60947-6-1

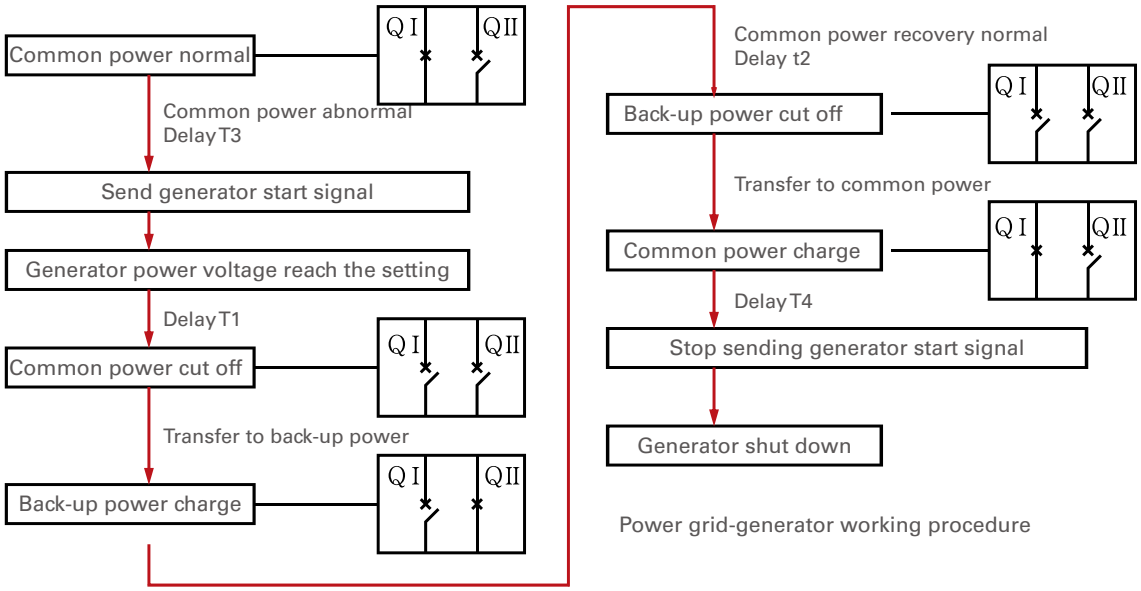

Power grid-generator working procedure

Maintenance and service

- Maintenance and service must be performed by the qualified professional.
- Do not maintain and repair the product, when it is in use.
- This product can work reliably at the rated voltage (85%~110%) Ue. To connect the product wires, the incoming terminal, the outgoing terminal, and N phase shall be distinguished strictly. Also, the neutral line shall not be shared.
- Do not use this product in the conditions out of the normal use condition range.
  For example: no preventive measures shall be taken when there is continuous water vapor or condensation, flammable or corrosive powder, the expected short-circuit current is out of the range, the voltage is very high or low, the current exceeds the rated value, and the altitude is very high.
- To transfer manually, please use the special handle provided on this product.
- If the protective device is disconnected due to line or load failure, eliminate the failure and then power on the load.
- The product shall be checked generally during operation at regular interval (such as once in every three months).
- To check whether the product works normally, transfer the switch manually or automatically.



Contact us

Get in touch with Himel Team at
https://www.himel.com/contact-us

Find a Local Himel Distributor at
https://www.himel.com/find-a-distributor

Reach Himel Global Team at
support@himel.com

Contact Global Himel Marketing and Communication Team at
sm.himel.communications@himel.com

Visit Himel website at
https://www.himel.com
or
Scan QR Code ▼

Learn More about Himel's
15-Years of Value Engineering
Excellence
Scan QR Code ▼

15 YEARS VALUE ENGINEERING EXCELLENCE

Himel
www.himel.com

MAY 2024

©2024 HIMEL